DIAMOND
Fiber Optic Components

CABLE ASSEMBLIES AND ADAPTERS

X-BEAM FUSION

(Harsh environment)

MULTIMODE

The Diamond X-BEAM FUSION is a genderless tactical fiber optic connector which uses lens based expanded beam technology for ease of cleaning and mating in outdoor applications. The X-BEAM FUSION incorporates a special insert with removable Fiber Optic termini which allow an easy field termination and repair, this thanks to a quick termini locking mechanism and the Diamond ZEUS D50 HE Fusion splicer.
The X-BEAM FUSION connector is an ideal choice for use within harsh environments such as field-deployable communications, mobile diagnostic units, avionics, security systems and much more. The Diamond X-BEAM FUSION connector is available with up to 4 channels and can be terminated on most types of Multimode cable constructions.

X-BEAM OLB and OLC

FEATURES AND BENEFITS

- Rugged construction
  Highly reliable optical connections
- IP 67 rated enclosure, IEC 60529 compliant
- Intermateable with connectors compliant with MIL-DTL83526/20/21
- High tolerance connector housings
  Easily mated, repeatable, low loss connections
- Integrated expanded beam lens system
  Protects the fiber endface and improves optical performance in harsh environment applications
- Genderless design
  Simplifies mating
- Easy field termination and repair

ZEUS D50 HE Fusion Field Termination Kit

AVAILABLE AS

- Terminated connector
- Fusion connector set, (to be terminated with Diamond special equipment)

SPECIFICATIONS

		UNITS	TEST CONDITIONS
Insertion Loss (IL) MM	typ. 0.9 max. 1.4 (97%)	dB	IEC 61300; λ = 1300 nm; CPR 18dB
Return Loss (RL) MM	min. 18	dB	IEC 61300; λ = 1300 nm
Vibration, sinusoidal	10-500	Hz	3 directions, 10g acceleration
Free fall	500 falls		On concrete; severity 1.2m
Coupling endurance	2500 couplings		According to field experience
Operating temperature	-40/+85*	°C	IEC 61300-2-22
Storage temperature	-55/+85* (Δ IL < 0.8 dB)	°C	
Damp heat, cyclic	+55*	°C	IEC 61300-2-46
Cable retention	800	N	IEC 61300-2-4

* May be further limited by cable specifications

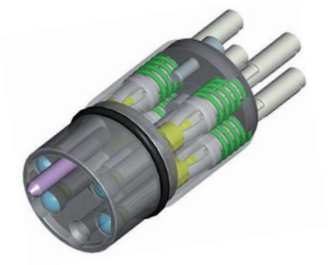

X-BEAM 4 channels insert

DIAMOND SA • Via dei Patrizi 5 • CH-6616 Losone - Switzerland
Tel. +41 91 785 45 45 • Fax +41 91 785 45 00 • e-mail info@diamond-fo.com
www.diamond-fo.com

Specifications subject to change without notice

BDD 1951551 *01_15*

CONNECTOR TYPES AND DIMENSIONS

X-BEAM FUSION OLC (Optical Lenses Connector), 1 to 4 channels

Available types: **X-BEAM FUSION OLC 2 x**
X-BEAM FUSION OLC 4 x

Housing material: Metal/plastic (Black)

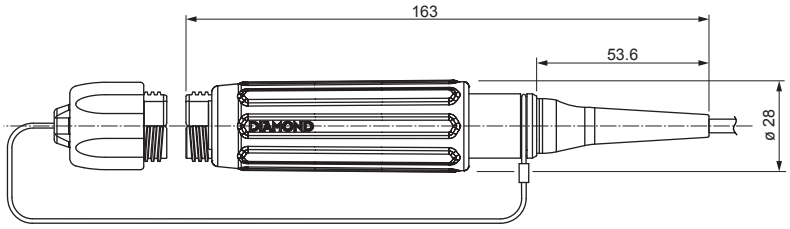

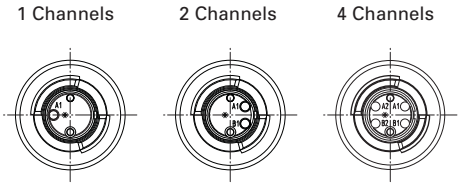

X-BEAM FUSION OLB (Optical Lenses Bulkhead), 1 to 4 channels

Available types: **X-BEAM FUSION OLB 2 x**
X-BEAM FUSION OLB 4 x

Housing material: Metal (Black)

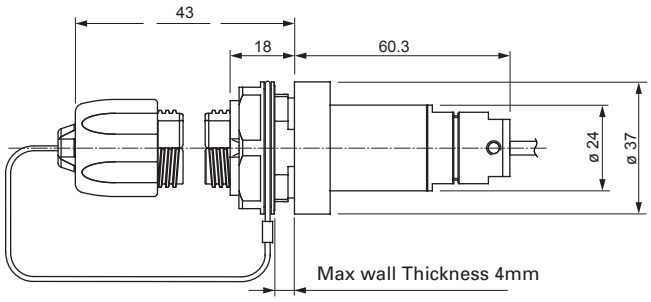

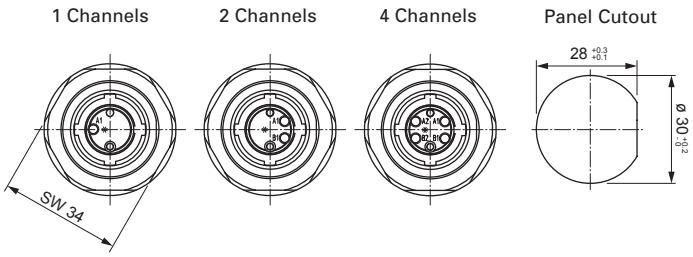

NOTE Other configuration available upon request.

ORDER INFORMATION

Please contact your nearest local Diamond representative or fill in the contact form available on the **www.diamond-fo.com** website.